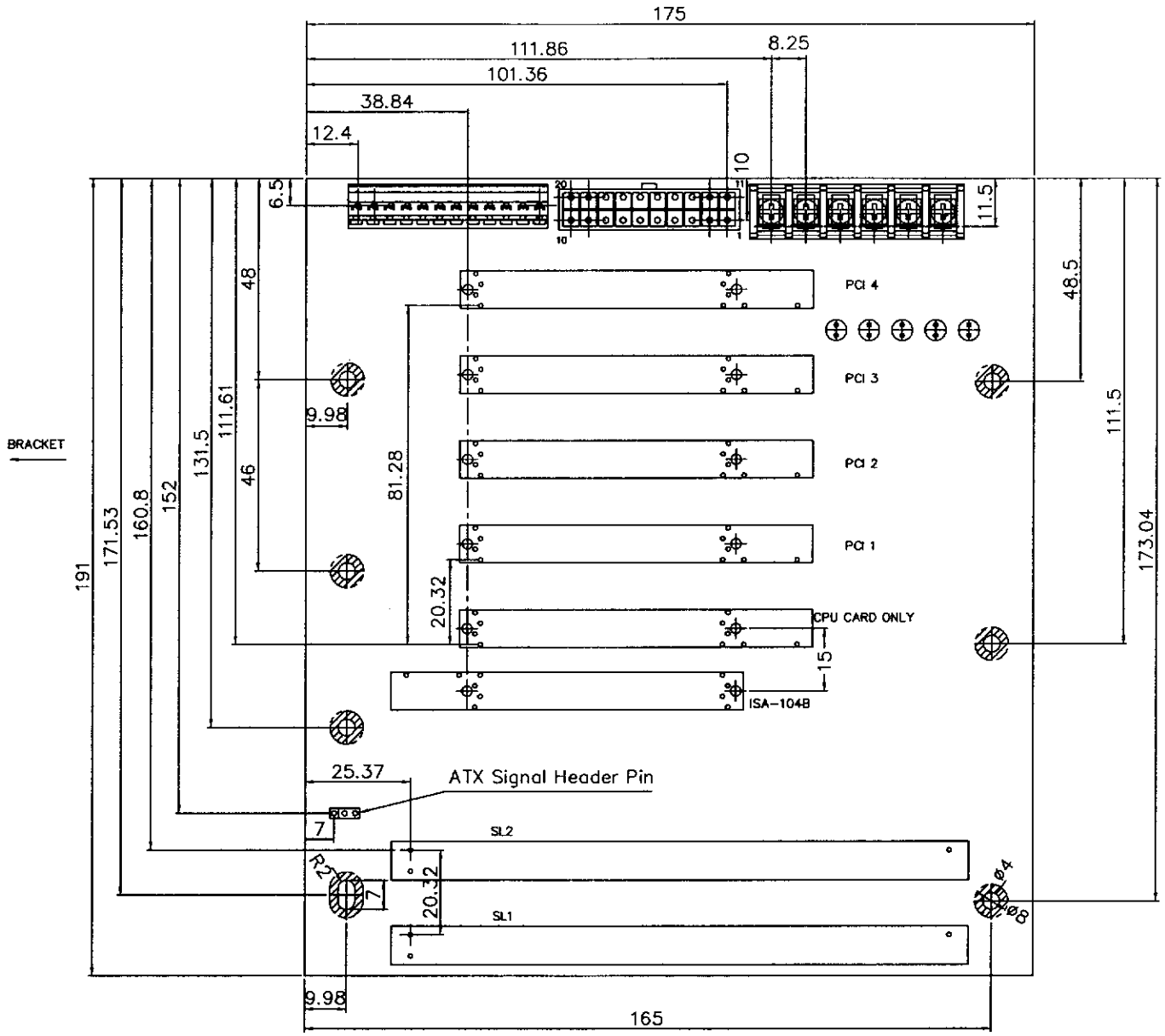

Tolerance = ±0.2

PCB t= 1.6mm ±0.1

Model: BACKPLANE	DRAWN BY	DESIGNED BY	MATERIAL	SCALE	UNIT	DRAWING NO.	REVISION	SHEET NO
	Wenhsing	Wenhsing	t=1.6	1 / 1	mm			
Name: PD-PCI5P2IC	CHECKED BY	APPROVAL BY	DATE				D2	
			Jan/03/2002					